Type 8202 ELEMENT neutrino

pH or redox meter
pH- oder Redoxpotential-Messgerät
pH- ou redox-mètre

Operating Instructions (from serial number 3000)

Bedienungsanleitung (ab Serien-Nummer 3000)
Manuel utilisateur (à partir du numéro de série 3000)

MAN 1000333418 EN Version: DStatus: RL (released | freigegeben) printed: 08.04.2025

Operating Instructions 2009/04_EU-ML 00561658 / Original FR

1. THE OPERATING INSTRUCTIONS

The Operating Instructions describe the entire life cycle of the device. Please keep the Operating Instructions in a safe place, accessible to all users and any new owners.

The Operating Instructions contain important safety information.

Failure to comply with these instructions can lead to hazardous situations.

- The Operating Instructions must be read and understood.

1.1. Symbols used

DANGER

Warns against an imminent danger.

- Failure to observe this warning results in death or in serious injury.

WARNING

Warns against a potentially dangerous situation.

- Failure to observe this warning can result in serious injury or even death.

CAUTION

Warns against a possible risk.

- Failure to observe this warning can result in substantial or minor injuries.

NOTICE

Warns against material damage.

- Failure to observe this warning may result in damage to the device or system.

Indicates additional information, advice or important recommendations.

Refers to information contained in these Operating Instructions or in other documents.

- Indicates an instruction to be carried out to avoid a danger, a warning or a possible risk.

→ Indicates a work step that you must carry out.

1.2. Definition of the term device

The term device that is used within these Operating Instructions refers to the pH-meter or redox-meter Type 8202 ELEMENT neutrino.

1.3. Validity of the Operating Instructions

The Operating Instructions are valid for the Type 8202 ELEMENT neutrino devices with a series number equal or higher than 3000.

2. INTENDED USE

Use of the device that does not comply with the instructions could present risks to people, nearby installations and the environment.

The device is intended solely for the measurement of one the following physical quantities, depending on the fitted probe:

- the pH in clean liquids or liquids containing solids, sulphides or proteins,
- the oxidation reduction potential in clean liquids or liquids containing solids, sulphides or proteins which may present low conductivity.

- Use the device in compliance with the characteristics and start-up and use conditions specified in the contractual documents and in the Operating Instructions.
- Store, transport, install and operate the device properly.
- Only operate a device in perfect working order.
- Only use the device as intended.

3. BASIC SAFETY INFORMATION

This safety information does not take into account any contingencies or occurrences that may arise during installation, use and maintenance of the device.

The operating company is responsible for the respect of the local safety regulations including for the staff safety.

Risk of injury due to electrical voltage.

- If the device is installed either in a wet environment or outdoors, all the electrical voltages must be of max. 35 V DC.
- Before carrying out work on the system or the device, disconnect the electrical power for all the conductors and isolate it.
- All equipment connected to the device must be double insulated with respect to the mains according to the standard UL/EN 61010-1.
- Observe all applicable accident protection and safety regulations for electrical equipment.

Risk of injury due to pressure in the installation.

- Before any intervention in the installation, stop the circulation of fluid, cut off the pressure and drain the pipe.
- Before any intervention in the installation, make sure there is no pressure in the pipe.
- Observe the dependency between the fluid temperature and the fluid pressure.

Risk of burns due to high fluid temperatures.

- Do not touch with bare hands the parts of the product that are in contact with the fluid.
- Before opening the pipe, stop the circulation of fluid and drain the pipe.
- Before opening the pipe, make sure the pipe is completely empty.

Risk of injury due to the nature of the fluid.

- Respect the prevailing regulations on accident prevention and safety relating to the use of dangerous fluids.

Various dangerous situations

To avoid injury, observe the following instructions:

- Do not use the device in explosive atmospheres.
- Do not use the device in an environment that is incompatible with the device materials.
- Do not use fluid that is incompatible with the device materials. Find the compatibility chart on our homepage: country.burkert.com
- Do not subject the device to mechanical stress.
- Do not make any modifications to the device.
- Prevent any unintentional power supply switch-on.

Various dangerous situations

To avoid injury take care:

- Only qualified and skilled staff may carry out the installation and maintenance work.
- Ensure a defined or controlled restarting of the process after a power supply interruption.
- Observe the general technical rules.

NOTICE

Elements and components that are sensitive to electrostatic discharges

The device contains electronic components that are sensitive to electrostatic discharges. The components may be damaged if they are touched by an electrostatically charged person or object. In the worst case scenario, the components are instantly destroyed or go out of order as soon as they are activated.

- To minimise or even avoid all damage due to an electrostatic discharge, take all the precautions that are described in the EN 61340-5-1 norm.
- Do not touch any of the live electrical components.

4. GENERAL INFORMATION

4.1. Manufacturer's address and international contacts

To contact the manufacturer of the device use following address:

Bürkert SAS

Rue du Giessen

BP 21

F-67220 TRIEMBACH-AU-VAL

The addresses of our international sales offices are available on the internet at: country.burkert.com

4.2. Warranty conditions

The condition governing the legal warranty is the conforming use of the device in observance of the operating conditions specified in the Operating Instructions.

4.3. Information on the Internet

You can find the Operating Instructions and technical data sheets for the Type 8202 ELEMENT neutrino at: country.burkert.com

5. DESCRIPTION

5.1. Construction

The device comprises:

- A module for converting physical parameters, comprising:
  - A pH probe or redox probe that converts the pH or the redox potential of the fluid into differences in potential (PD in mV). The differences in potential are then transmitted to the PD acquisition/conversion module;
  - A Pt1000 temperature probe integrated in the probe holder which converts the temperature of the fluid into resistance (in Ω).
- A PD acquisition / conversion module:
  - PD acquisition measured in mV;
  - Conversion of the measured PD into pH units with temperature compensation (for a device with pH probe only)
  - Acquisition of the resistance in Ω and conversion into °C.

The device operates on a 2-wire system and requires an operating voltage of 12...36 V DC. Depending on the device variant, electrical connection is made over one of the following means:

- a 5-pin M12 male connector
- a 5-pin terminal block over a cable gland.

The device can be fitted with a standard probe 120 mm long, measuring the pH or the oxidation reduction potential. It is screwed into a holder with the built-in Pt1000 temperature probe.

- The pH probe is a glass membrane with variable selectivity according to the pH. When the pH probe is immersed in a solution, a difference in potential is formed, due to the hydrogen ions (H+), between the glass membrane and the solution. This difference in potential, measured in relation to a reference electrode, is directly proportional to the pH value (59.16 mV per pH unit at 25 °C).
- When a Redox probe is immersed in a solution, an exchange of electrons occurs between the oxidised form and the reduced form of an electrolyte. The resulting voltage is the oxidation reduction potential.

5.2. Type label

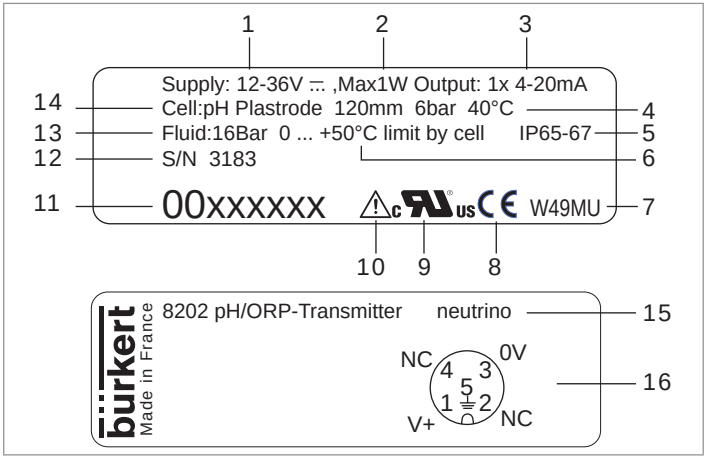

1.	Operating voltage
2.	Power consumption
3.	Output type
4.	Measuring range
5.	IP-Code
6.	Fluid temperature
7.	Manufacturing code
8.	Conformity marking
9.	Certification
10.	Warning: Before using the device, take into account the technical specifications described in these Operating Instructions
11.	Article number
12.	Serial number
13.	Nominal pressure of the fluid
14.	Constant of the measuring cell
15.	Type of the device and measured quantity
16.	Pin assignment of the electrical connection

Fig. 1: Type label (example)

6. TECHNICAL DATA

6.1. Conditions of use

Ambient temperature	–10...+60 °C, without pH probe or redox probe
Air humidity	< 85%, without condensation
Operating condition	Continuous operation
Mobility of the device	Fixed device
Use	Indoor and outdoor. ▸ Protect the device against electromagnetic interference, ultraviolet rays and, when installed outdoors, the effects of the climatic conditions.
IP-Code NEMA protection type *1) not evaluated by UL*	▪ IEC / EN 60529: IP67 [1] and IP65 [1] ▪ NEMA 250: 4X and 6P Mating female connector must be wired and plugged, or cable gland must be wired and tightened. Cover of the connecting box must be fully tightened and locked.
Degree of pollution	Degree 2 according to UL/EN 61010-1
Installation category	Category I according to UL/EN 61010-1
Maximum height above sea level	2000 m

6.2. Conformity to standards and directives

The applied standards, which verify conformity with the EU directives, can be found on the EU-Type examination certificate or the EU declaration of conformity (if applicable).

6.2.1. Conformity to the pressure equipment directive

- ▸ Make sure that the device materials are compatible with the fluid.
- ▸ Make sure that the pipe DN is adapted for the device.
- ▸ Observe the nominal pressure (PN) of the fluid for the device. The nominal pressure (PN) of the fluid is given by the device manufacturer.

The device conforms to Article 4, Paragraph 1 of the Pressure Equipment Directive 2014/68/EU under the following conditions:

- Device used on a pipe (PS = maximum admissible pressure in bar; DN = nominal dimension of the pipe, no unit)

Type of fluid	Conditions
Fluid group 1, Article 4, Paragraph 1.c.i	DN ≤ 25
Fluid group 2, Article 4, Paragraph 1.c.i	DN ≤ 32 or PSxDN ≤ 1000 bar
Fluid group 1, Article 4, Paragraph 1.c.ii	DN ≤ 25 or PSxDN ≤ 2000 bar

Type of fluid	Conditions
Fluid group 2, Article 4, Paragraph 1.c.ii	DN ≤ 200 or PS ≤ 10 bar or PSxDN ≤ 5000 bar

- Device used on a vessel (PS = maximum admissible pressure in bar; V = vessel volume in L)

Type of fluid	Conditions
Fluid group 1, Article 4, Paragraph 1.a.i	V >1 L and PSxV ≤ 25 bar.L OR PS ≤ 200 bar
Fluid group 2, Article 4, Paragraph 1.a.i	V >1 L and PSxV ≤ 50 bar.L OR PS ≤ 1000 bar
Fluid group 1, Article 4, Paragraph 1.a.ii	V >1 L and PSxV ≤ 200 bar.L OR PS ≤ 500 bar
Fluid group 2, Article 4, Paragraph 1.a.ii	PS >10 bar and PSxV ≤ 10000 bar.L OR PS ≤ 1000 bar

6.2.2. UL certification

Devices with variable key PU01 or PU02 are UL-certified devices and comply also with the following standards:

- UL 61010-1
- CAN/CSA-C22.2 n°61010-1

Identification on the device	**Certification**	**Variable key**
c US	UL-recognized	PU01
c UL US LISTED Measuring Equipment EXXXXXX	UL-listed	PU02

6.3. Materials

Component	Material
Box / seals	stainless steel, PPS / EPDM
Cover / seal	PPS / EPDM
M12 male connector / seal	PA66 / EPDM
Cable gland / seal	PA66 / EPDM
Nut	PVC (or PVDF on request)
Probe holder / seal	PVDF, stainless steel 1.4571 (316Ti) / EPDM
pH probe or redox probe	Refer to the related Operating Instructions

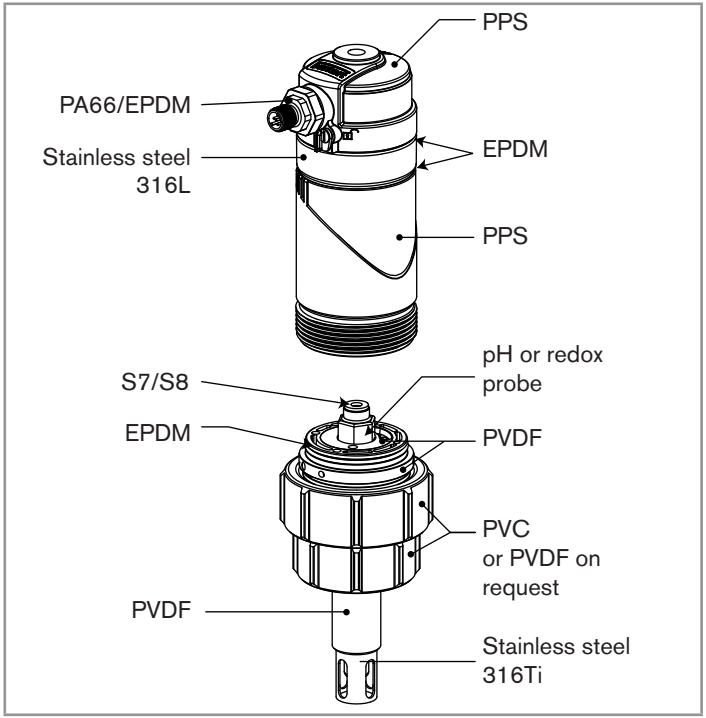

Fig. 2: Materials used in the device

6.4. Dimensions

→ Refer to the data sheet of the device, available at: country.burkert.com

6.5. Fluid data

Fluid pressure *2) not evaluated by UL*	PN16 [2)] The fluid pressure may be restricted by the probe used and the fitting used. Refer to the related Operating Instructions. The fluid pressure may be restricted by the material of the nut and the fluid temperature. Refer to Fig. 3, Fig. 4 and Fig. 5.
Fluid temperature	
▪ Device variant with a PVC nut	▪ 0...+50 °C The fluid temperature may be restricted by the probe used and the fitting used. Refer to the related Operating Instructions. The fluid temperature may be restricted by the fluid pressure Refer to Fig. 3 and Fig. 4.
▪ Device variant with a PVDF nut	▪ −20...130 °C The fluid temperature may be restricted by the probe used and the fitting used. Refer to the related Operating Instructions. The fluid temperature may be restricted by the fluid pressure Refer to Fig. 3 and Fig. 5.
pH measurement ▪ Measurement range ▪ Accuracy	 ▪ 0...14 pH ▪ ±0.05 pH
Redox potential measurement ▪ Measurement range ▪ Accuracy	 ▪ −2000...+2000 mV ▪ ±3 mV
Temperature probe	Pt1000 integrated in the probe holder
Temperature measurement ▪ Measurement range ▪ Accuracy	 ▪ −40...+130 °C ▪ ±1 °C
Temperature compensation	▪ Automatic (integrated Pt1000) ▪ Reference temperature = 25 °C

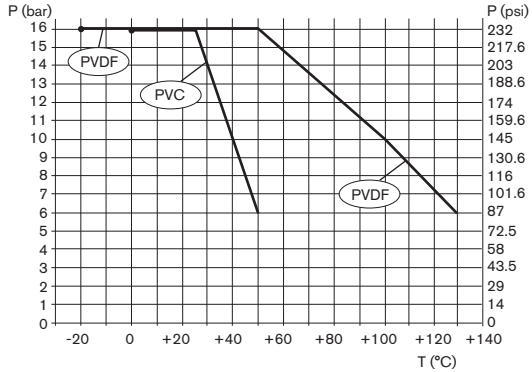

These measurements were taken at an ambient temperature of 60 °C.

Fig. 3: Device with a PVC nut or a PVDF nut, without probe: Dependency between the fluid temperature and the fluid pressure

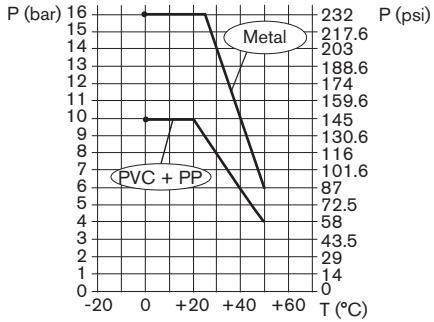

Fig. 4: Device variant with a PVC nut, without probe, with an S022 in metal, PVC or PP: Dependency between the fluid temperature and the fluid pressure

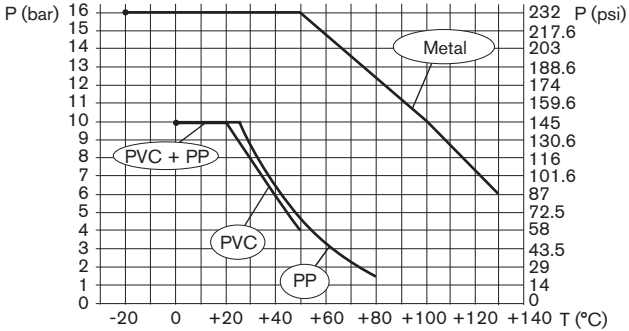

Fig. 5: Device variant with a PVDF nut, without probe, with an S022 in metal, PVC or PP: Dependency between the fluid temperature and the fluid pressure

6.6. Electrical data

Operating voltage	▪ 12...36 V DC ▪ connection to main supply: permanent through external safety extra-low voltage (SELV) and through limited power source (LPS) ▪ filtered and regulated
Power consumption	≤ 25 mA (12...36 V DC)
Power source (not supplied)	▪ limited power source according to UL/EN 60950-1 standard ▪ or limited energy circuit according to UL/EN 61010-1, Paragraph 9.4
Protection against polarity reversal	yes
Protection against spike voltages	yes
Current output	4...20 mA
▪ Accuracy	▪ ±1 % (0.16 mA)
▪ Response time (10 % - 90 %)	▪ 5 s
▪ Loop impedance max.	▪ 1100 Ω at 36 V DC, 610 Ω at 24 V DC, 100 Ω at 12 V DC

6.7. pH probe, redox probe

The specifications of Bürkert probes can be found in the related Operating Instructions.

The device must be used with a pH or redox probe that satisfies the following specifications:

- combined probe;
- length: 12 mm;
- with PG 13.5 head;
- with an S7/S8 connector;
- without temperature probe.

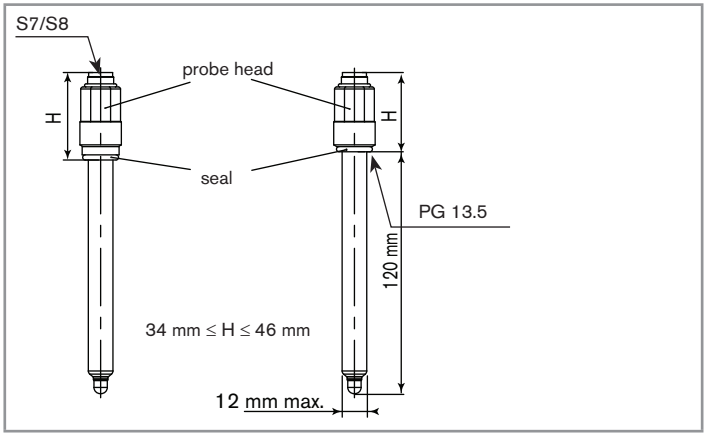

Fig. 6: Specifications of the pH probe or redox probe

7. ASSEMBLY

7.1. Safety instructions

DANGER

Risk of injury due to electrical voltage.

- If the device is installed either in a wet environment or outdoors, all the electrical voltages must be of max. 35 V DC.
- Before carrying out work on the system or the device, disconnect the electrical power for all the conductors and isolate it.
- All equipment connected to the device must be double insulated with respect to the mains according to the standard UL/ EN 61010-1.
- Observe all applicable accident protection and safety guidelines for electrical equipment.

WARNING

Risk of injury due to non-conforming assembly.

- The device must only be assembled by qualified and skilled staff with the appropriate tools.

Risk of injury due to unintentional switch on of power supply or uncontrolled restarting of the installation.

- Take appropriate measures to avoid unintentional activation of the installation.
- Guarantee a set or controlled restarting of the process subsequent to any intervention on the device.

7.2. Unscrewing the cover on the connection box

NOTICE

The tightness of the device is not guaranteed when the cover is removed.

- Take any precautions necessary to prevent the projection of liquid inside the box.

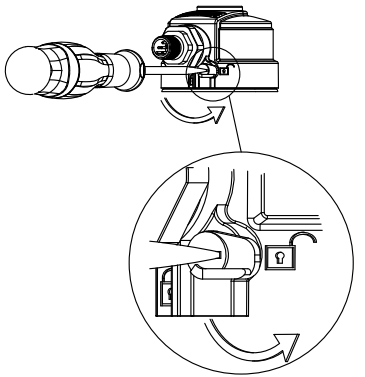

The connection box is fitted with a locking system.

→ Using a screwdriver with a suitable head, unlock the connection box by turning the latch to the unlock position.

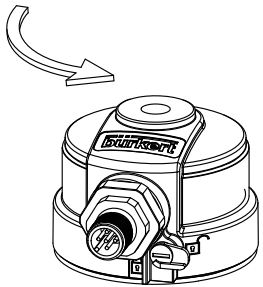	→ Unscrew the cover on the connection box by hand.

Fig. 7: Unscrewing the cover on the connection box

7.3. Fitting the cover to the connection box

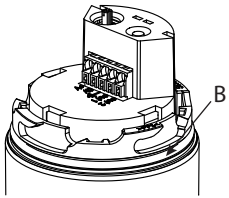	→ Check that seal "B" on the cover is in good condition. Replace it if necessary (see chpt. 11 and chpt. 10.5).

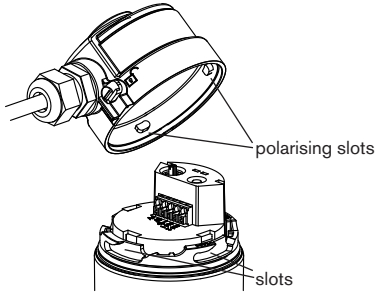	→ Position the polarising slots on the cover in the axis of the slots on the box: 3 positions are possible.
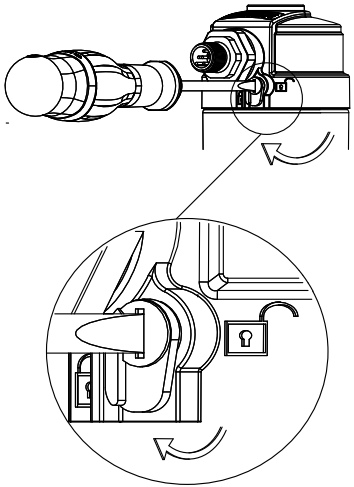	→ Tighten the cover on the connection box. → Using a screwdriver with a suitable head, turn the latch to the lock position to lock the cover.

Fig. 8: Fitting the cover on the connection box

7.4. Fitting the probe into the holder (without fluid)

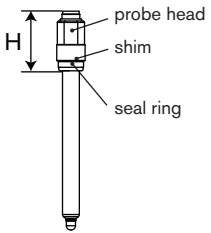	→ Check that the probe dimension H is between 34 and 46 mm. If necessary, use a shim to adjust the height. → Removing the protective plug from the probe.
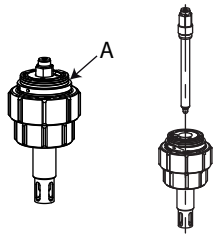	→ Check that the sealing ring A is in good condition and that it is correctly positioned in the groove on the holder. → Inserting the probe into the holder from the top.
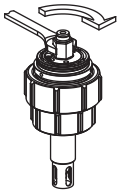	→ Tighten the probe head using a suitable wrench to a torque of 2 Nm.

Fig. 9: Fitting the probe into the holder (without fluid)

8. INSTALLATION

8.1. Safety instructions

DANGER

Risk of injury due to pressure in the installation

- Stop the circulation of fluid and depressurize the pipes before loosening the process connections.

Risk of injury due to electrical voltage.

- If the device is installed either in a wet environment or outdoors, all the electrical voltages must be of max. 35 V DC.
- Before carrying out work on the system or the device, disconnect the electrical power for all the conductors and isolate it.
- All equipment connected to the device must be double insulated with respect to the mains according to the standard UL/ EN 61010-1.
- Observe all applicable accident protection and safety guidelines for electrical equipment.

Risk of injury due to the nature of the fluid.

- Respect the regulations on accident prevention and safety relating to the use of aggressive fluids.

Risk of injury due to high fluid temperatures.

- Use safety gloves to handle the device.

WARNING

Risk of injury due to non-conforming installation.

- The electrical and fluid installation can only be carried out by qualified and skilled staff with the appropriate tools.
- Install appropriate safety devices (correctly rated fuse and/or circuit-breaker).
- Respect the assembly instructions for the fitting used.

Risk of injury due to unintentional switch on of power supply or uncontrolled restarting of the installation.

- Take appropriate measures to avoid unintentional activation of the installation.
- Guarantee a set or controlled restarting of the process subsequent to any intervention on the device.

8.2. Installation on the pipe

WARNING

Risk of injury if the dependency between the fluid pressure and the fluid temperature is not respected.

- Take account of the dependency curves between the fluid temperature and fluid pressure. Refer to chpt. 6.5.
- Comply with the Pressure Equipment Directive 2014/68/EU.

NOTICE

The device may be irremediably damaged if it is installed in the pipe without the probe.

- Always install the device in the pipe fitted with a probe.

If a pH/redox probe (with PG 13.5 head, 120 mm long and without temperature probe) from a supplier other than Bürkert is used, follow the relevant instructions on installation in the pipe.

If the pH or oxidation reduction potential is measured in liquids containing solids that may leave deposits in the bottom of the pipe, use installation position 1 (see Fig. 10).

The probe must always be immersed in the fluid to prevent it drying out.

The device is inserted into a S022 fitting installed into the pipe.

→ Choose an appropriate position in the pipe to install the fitting (see Fig. 10).

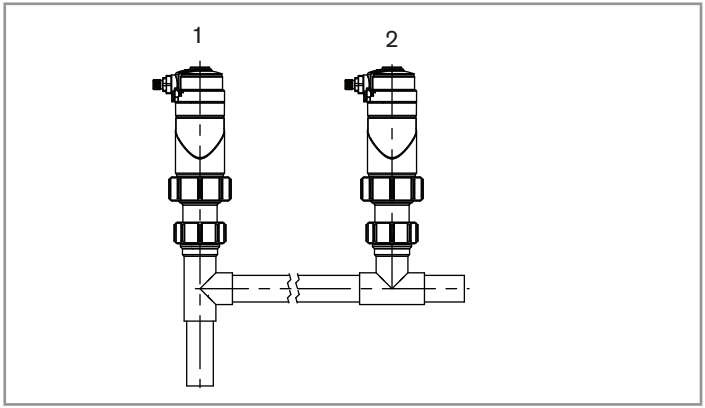

Fig. 10: Mounting positions of the fitting/device unit in the pipe.

→ Install the fitting in the pipe at an angle of ±75° max. to the vertical (see Fig. 11) in accordance with the instructions in the Operating Instructions for the fitting used.

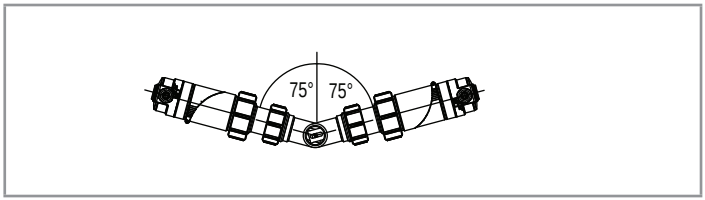

Fig. 11: Angle to the vertical

→ Fitting the probe into the holder (see chap. 7.4).

→ Installing the holder, with its probe, in the fitting (see Fig. 12).

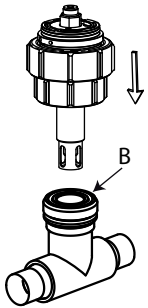	→ Check the presence and the condition of seal B on the fitting. Replace the seal if necessary. → Insert the holder fitted with the probe carefully into the fitting.
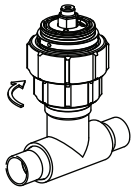	→ Tighten the nut G 1 1/2" on the fitting by hand. → Pressurise the pipe to check the tightness of the assembly.

Fig. 12: Installation of the probe holder in a fitting

8.3. Fitting the electronic module to the holder

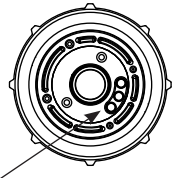	→ Check that the electrical contacts are in good condition and clean them with a brush if necessary.
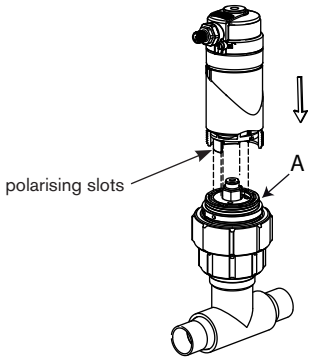	→ Check that seal "A" on the holder is in good condition. Replace it if necessary (see chpt. "11. Spare parts and accessories" and chpt. "10.4. Replacing the seal in the probe holder"). → Insert the electronic module into the holder, making sure the polarising slots are correctly positioned.

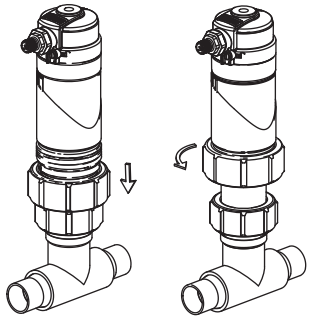	→ Apply slight vertical pressure to engage the tightness seal. → Fasten the electronic module and the holder together by tightening the nut. Tighten the nut G2" by hand only, until it stops turning, to ensure good electrical contact with the temperature probe.

Fig. 13: Fitting the electronic module to the holder

→ Calibrate the probe (see chpt. "9. Adjustment and start-up").

8.4. Electrical wiring

DANGER

Risk of injury due to electrical voltage.

- If the device is installed either in a wet environment or outdoors, all the electrical voltages must be of max. 35 V DC.
- Before carrying out work on the system or the device, disconnect the electrical power for all the conductors and isolate it.
- All equipment connected to the device must be double insulated with respect to the mains according to the standard UL/ EN 61010-1.
- Observe all applicable accident protection and safety guidelines for electrical equipment.

- Use a high-quality electrical power supply. The power supply must be filtered and regulated.
- Make sure the installation is equipotential.

8.4.1. Electrical connections

Device variant	Connection type
M12 male connector	For the mating M12 female connector with article number 917116, use a shielded cable: ▪ diameter: 3...6.5 mm ▪ wire cross section: max. 0.75 mm²
5-pin terminal strip and a cable gland	Shielded cable (not provided): ▪ diameter: 4...8 mm ▪ Wires in compliance with the characteristics of the Table 1

Table 1 : Specifications of the wires composing the cable for a device variant with cable gland

Wire specifications	Dimensions
▪ Clamping area	0.14...1.5 mm²
▪ Single core H05(07) V-U	0.25...1.5 mm²
▪ Flexible wire H05(07) V-K	0.25...1.5 mm²
▪ With non-insulated end connection	0.25...1.5 mm²
▪ With insulated end connection	0.25...0.75 mm²

8.4.2. Wiring a device variant with cable gland

- Select a cable that meets the specifications detailed in chapter "8.4.1. Electrical connections".

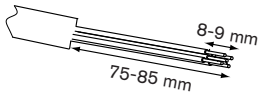	→ Strip 75 to 85 mm of the cable. → Expose 8 to 9 mm of wire on the stripped cable.

Fig. 14: Stripping the cable and exposing the wires.

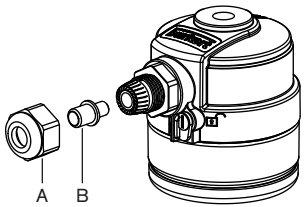	→ Unscrew and remove the cable gland nut [A]. → Remove the stopper [B] from the cable gland. → Unscrew the cover on the connection box (see chpt. 7.2)

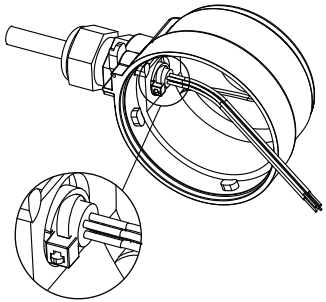	→ Thread the cable through the cable gland nut and the cable gland. → Pull the cable into the box until the end of the stripped part of the cable sticks out of the cable gland by 5 to 6 mm. → Roll a cable clamp around the cable sheath (twice). → Tighten the cable clamp. → Pull the cable out of the box to check that it is secure.

Fig. 15: Threading the cable into the cable gland.

→ Tighten the cable gland.

→ Connect the 4...20 mA output (see Fig. 16).

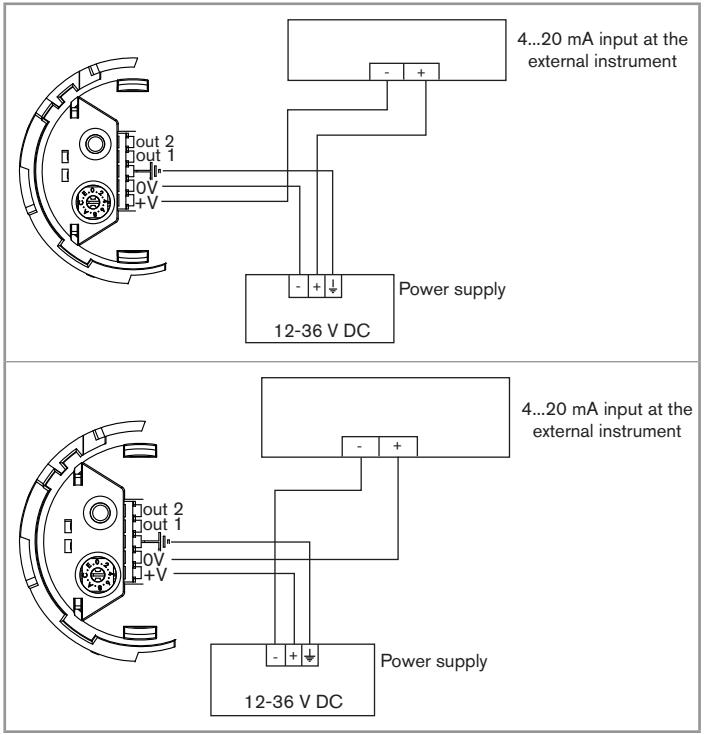

Fig. 16: Possible connections of the 4...20 mA current output on a device variant with cable gland.

→ Fit the cover to the connection box (see chpt. 7.3).

8.4.3. Assembling and wiring the female connector, article number 917116

See chpt. "11. Spare parts and accessories"

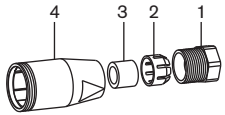	→ Unscrew the nut [1] from the body [4]. → Insert the cable into the nut [1], the cable clamp [2], the seal [3] and into the body [4].
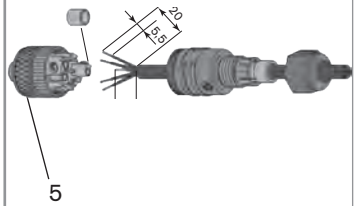	→ Strip 20 mm of the cable. → Cut the central wire (earth) so that its length is equal to 11.5 mm. → Expose 5.5 mm of the wires on the stripped cable. → Insert each wire into the appropriate pin. Refer to chpt. 8.4.4. → Tighten the wired terminal block [5] to the body [4]. → Tighten the connector nut [1].

Fig. 17: M12 multi-pin connector (not provided)

8.4.4. Wiring a device variant with M12 male connector

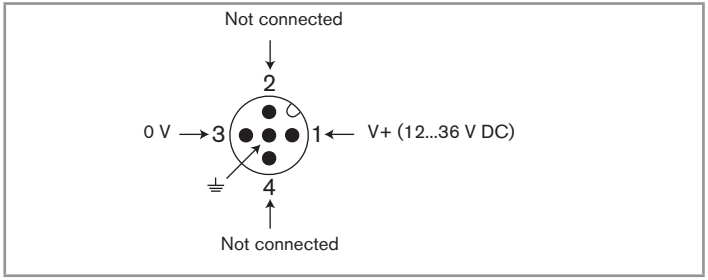

Fig. 18: Pin assignment of the M12 male connector

Pin of the M12 female connector available as an accessory (article number 438680)	Signal	Colour of the conductor
1	V+	brown
2	NC	white
3	0 V	blue
4	NC	black
5	⏚	green/yellow or grey

The M12 male connector is adjustable:

→ Unscrew the locknut.

→ Turn the male connector to the desired position, by 360° max. so as not to twist the cables inside the casing.

→ Tighten the locknut using a spanner, while keeping the male connector in the desired position.

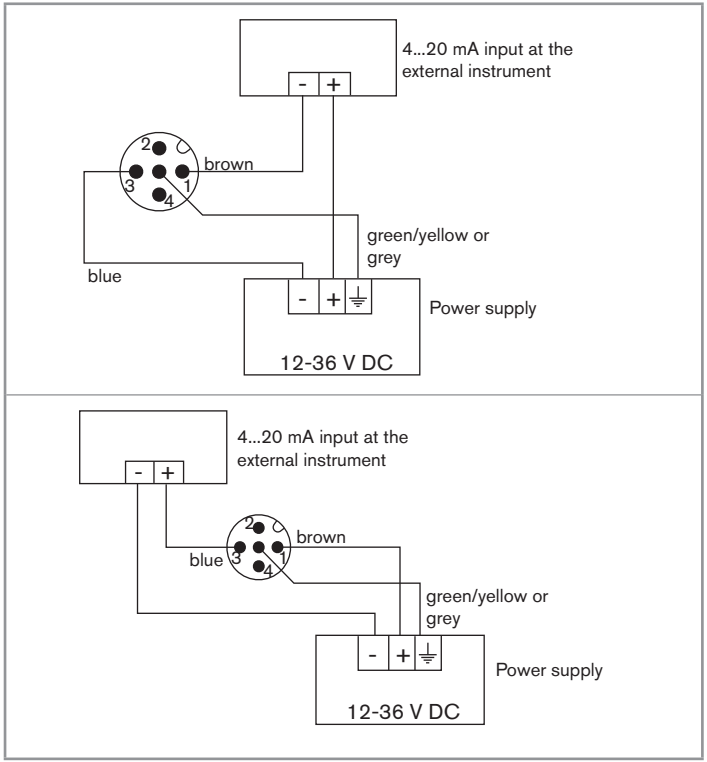

Fig. 19: Possible connections of the 4...20 mA current output on a device variant with M12 male connector.

Internal wiring of the M12 male connector to the terminal strip

Terminal strip pins	Colour of the wire connecting the male connector to the terminal strip
V+	red
0 V	black
⏚	green
OUT1	grey
OUT2	orange

9. ADJUSTMENT AND START-UP

The following procedure is only valid for the devices with a series number equal or higher than 3000. Please refer to the Type label of the device.

9.1. Safety instructions

DANGER

Risk of injury due to electrical voltage.

- If the device is installed either in a wet environment or outdoors, all the electrical voltages must be of max. 35 V DC.
- All equipment connected to the device must be double insulated with respect to the mains according to the standard UL/ EN 61010-1.
- Observe all applicable accident protection and safety guidelines for electrical equipment.

Risk of injury due to the nature of the fluid.

- Respect the regulations on accident prevention and safety relating to the use of aggressive fluids.

WARNING

Risk of injury due to nonconforming adjustment.

Nonconforming adjustment could lead to injuries and damage the device and its surroundings.

- The operators in charge of adjustment must have read and understood the contents of these Operating Instructions.
- In particular, observe the safety recommendations and intended use.
- The device/installation must only be adjusted by suitably trained staff.

WARNING

Danger due to nonconforming start-up.

Nonconforming start-up could lead to injuries and damage the device and its surroundings.

- Before start-up, make sure that the staff in charge have read and fully understood the contents of the Operating Instructions.
- In particular, observe the safety recommendations and intended use.
- The device/installation must only be commissioned by suitably trained staff.

Protect this device against electromagnetic interference, ultraviolet rays and, when installed outdoors, the effects of the climatic conditions.

Before device start-up:

→ Adjust the measurement mode: pH or redox.

→ Calibrate the device.

9.2. Description of the connection box

The box contains the terminal strip for electrical connection and the following elements that are used for adjustment:

- a selector to choose the pH/redox or temperature range associated with the 4...20 mA output
- a push button
- a green LED, the device power-on indicator light
- a red LED used to:
  - indicate the selected measurement mode (see chpt. 9.3)
  - signal a problem (see chpt. 10.6).

9.3. Selecting the measurement mode: pH or redox

The device can be used with a pH probe or a redox probe. The measurement mode corresponding to the probe fitted must be selected. The default mode activated is the pH mode.

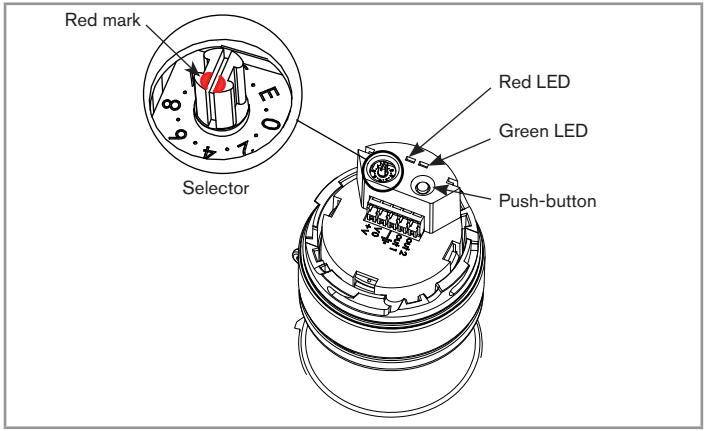

Fig. 20: Connection box

When the device is switched on and every 10 seconds afterwards, the red LED on the connection box flashes:

- once if the pH mode is activated;
- twice if the redox mode is activated.

To change the measurement mode:

→ hold in the push button (see Fig. 20) for at least 10 s.

Once the push button is released, the LED flashes to confirm the change of measurement mode:

- once if the pH mode is activated;
- twice if the redox mode is activated.

9.4. Choosing the pH, redox potential or temperature range associated with the 4...20 mA output

The selector (Fig. 20) is used to choose the pH, redox potential or temperature range associated with the 4...20 mA output. The 16 available ranges each correspond to one position on the selector: from 0 to 9 and A to F (the uneven positions are marked by a full stop); details are given in the table below.

→ Position the red mark of the selector on the desired range. In the example in Fig. 20, the selector is placed on position 5.

Selector position	4...20 mA output range in pH mode	4...20 mA output range in redox mode
0 (default position)	0...14 pH	–2000...+2000 mV
1	1...13 pH	–1500...+1500 mV
2	2...12 pH	–1000...+1000 mV
3	3...11 pH	–500...+500 mV
4	4...10 pH	–200...+200 mV
5	5...9 pH	–100...+100 mV
6	6...8 pH	–50...+50 mV
7	0...7 pH	–2000...0 mV
8	2...7 pH	–1500...0 mV
9	4...7 pH	–1000...0 mV
A	6...7 pH	–500...0 mV
B	7...8 pH	0...+500 mV
C	7...10 pH	0...+1000 mV

Selector position	4...20 mA output range in pH mode	4...20 mA output range in redox mode
D	7...12 pH	0...+1500 mV
E	7..14 pH	0...+2000 mV
F	−40...130 °C	−40...130 °C

9.5. Calibrating the pH or redox probes

DANGER

Risk of injury due to electrical voltage.

- If the device is installed either in a wet environment or outdoors, all the electrical voltages must be of max. 35 V DC.
- All equipment connected to the device must be double insulated with respect to the mains according to the standard UL/ EN 61010-1.
- Observe all applicable accident protection and safety guidelines for electrical equipment.

Risk of injury due to the nature of the fluid.

- Respect the regulations on accident prevention and safety relating to the use of aggressive fluids.

Calibrate the pH or redox probes before using for the first time.

During calibration, the red LED does not flash every 10 s: there is no indication of the selected measurement mode.

During calibration, the 4...20 mA output indicates the measured value.

If you have started the calibration and you have made no operation for 15 min, the device shows a fault by switching on the red LED.

→ Briefly press the push button to acknowledge the fault.

→ Restart the pH or the redox probe calibration.

→ Select the measurement mode (see chpt. 9.3).

→ Calibrate the pH probe:

- to 1 point (zero setting) with a solution pH=7;
- or to 2 points (zero setting and gain) with a solution pH=7 and a solution pH 4.01 or pH 10.01.

→ Calibrate the redox probe:

- to 1 point only (only the zero drifts over time) with a redox buffer solution 475 mV.

The pH buffer solutions and the redox solution 475 mV are sold by Bürkert (see chpt. "11. Spare parts and accessories").

9.5.1. 1-point calibration: zero adjustment

The procedure below only concerns the devices with a serial number higher than 3000. See the name plate.

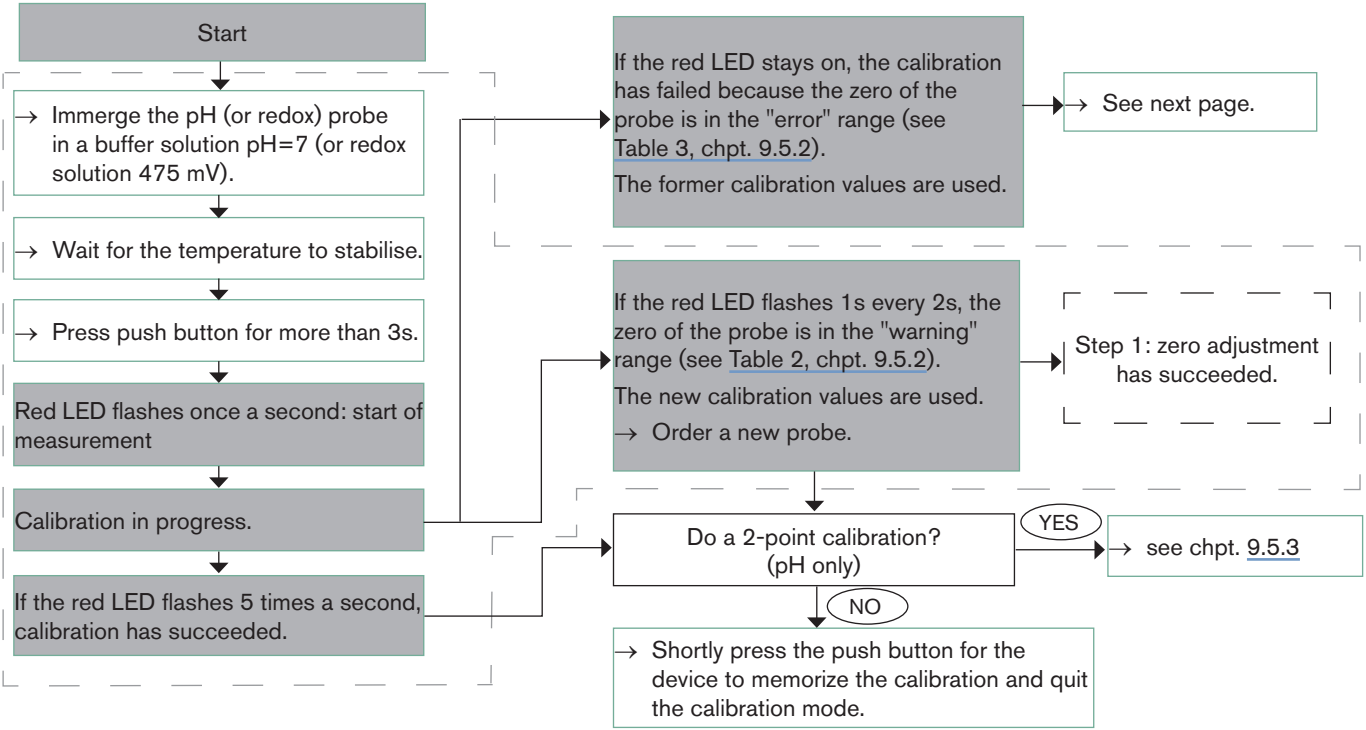

If the red LED stays on, the calibration has failed.
The former calibration values are used.

Buffer solution pH ≠ 7 or redox solution ≠ 475 mV

→ Briefly press the push button: error cleared.

→ Restart the calibration with a new buffer solution pH=7 (or redox solution).

Worsened probe.

→ Briefly press the push button: error cleared.

→ Replace the probe (see chpt. 10.3).

→ Restart the calibration with the new probe.

9.5.2. Calibration thresholds of the probe

Value of zero (mV)	Status
<-60	Error
-60...–35	Warning
–35...35	OK
35...60	Warning
>60	Error

Table 2 : Calibration thresholds of the zero

Value of the slope (mV/pH)	Status
<50	Error
50...53	Warning
53...63	OK
63...65	Warning
>65	Error

Table 3 : Calibration thresholds of the slope

9.5.3. 2-point calibration (pH only): zero and slope adjustments

The procedure below only concerns the devices with a serial number higher than 3000. See the name plate.

→ Do the zero adjustment procedure (see chpt. 9.5.1, step 1).

Red LED flashes 5 times a second or 1 s every 2 s (see chpt. 9.5.1).

→ Rinse the probe with water.
→ Immerge the pH probe in a buffer solution pH=4.01 or 10.01.
→ Wait for the temperature to stabilise.

→ Press the push button for more than 3 s: start of measurement.

Red LED flashes twice every second: start of measurement.

Calibration in progress.

If the red LED flashes 5 times a second, calibration has succeeded.

→ Briefly press the push button to memorize the calibration and quit the procedure.

If the red LED flashes 1 s. every 2 s., the slope of the probe is in the "warning" range (see Table 3, chpt. 9.5.2).
The calibration has been taken into account.
→ Order a new probe.

→ Briefly press the push button to memorize the calibration and quit the procedure.

If the red LED stays on: the slope of the probe is in the "error" range (see Table 3, chpt. 9.5.2).
- The former slope value is used.
- The new zero value is saved.

→ See next page.

If the red LED stays on: the slope of the probe is in the "error" range (see Table 3, chpt. 9.5.2).

- The former slope value is used.
- The new zero value is saved.

Buffer solution pH ≠ 4.01 or ≠ 10.01

→ Briefly press the push button: error cleared.

→ Restart the calibration with a new buffer solution pH=4.01 or pH=10.01.

Worsened probe.

→ Briefly press the push button: error cleared.

→ Replace the probe (see chpt. 10.3).

→ Restart the calibration with the new probe.

10. MAINTENANCE AND TROUBLESHOOTING

10.1. Safety instructions

DANGER

Risk of injury due to pressure in the installation.

- Stop the circulation of fluid and release the pressure before loosening the connections.

Risk of injury due to electrical voltage.

- If the device is installed either in a wet environment or outdoors, all the electrical voltages must be of max. 35 V DC.
- Before carrying out work on the system, disconnect the electrical power for all the conductors and isolate it.
- All equipment connected to the device must be double insulated with respect to the mains according to the standard UL/EN 61010-1.
- Observe all applicable accident protection and safety guidelines for electrical equipment.

Risk of injury due to high fluid temperatures.

- Use safety gloves to handle the device.

Risk of injury due to the nature of the fluid.

- Respect the prevailing regulations on accident prevention and safety relating to the use of dangerous fluids.

WARNING

Risk of injury due to non-conforming maintenance.

- Maintenance must only be carried out by qualified and skilled staff with the appropriate tools.
- Ensure that the restart of the installation is controlled after any interventions.

10.2. Cleaning the device

→ Clean the device with a cloth dampened with water or a detergent compatible with the materials the device is made of.

To clean the probe, refer to the Operating Instructions of the probe.

Please feel free to contact your Bürkert supplier for any additional information.

10.3. Replacing the probe

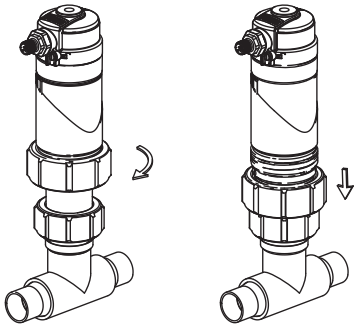	→ Unscrew the nut on the electronic module.
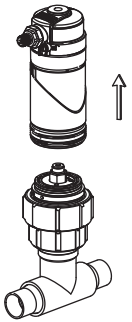	→ Remove the electronic module by pulling it straight out. There may be a resistance due to the tightness seal.

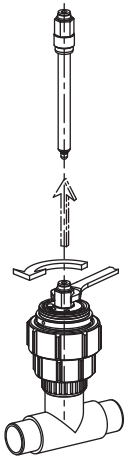	→ Unscrew the probe using a suitable wrench. → Remove it carefully from the holder. → Clean any fluid projections on the electrical contacts on the holder.

Fig. 21: Removing the probe from the holder

→ Fit a new probe into the holder as shown in chpt. 7.4.

→ Pressurise the pipe to check the tightness of the assembly.

→ Refit the electronic module to the holder as shown in chpt. 8.3.

→ Calibrate the probe (see chpt. 9.5).

10.4. Replacing the seal in the probe holder

The seal can be replaced without removing the holder from the pipe.

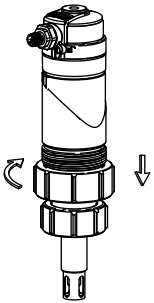	→ Unscrew the nut on the electronic module.
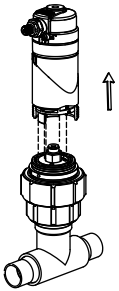	→ Separate the electronic module from the holder.
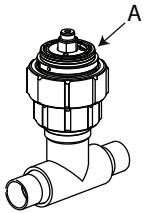	→ Remove the worn seal "A" from the holder. → Place the new seal "A" in the groove in the holder.

Fig. 22: Replacing the seal in the probe holder

→ Pressurise the pipe to check the tightness of the assembly.

→ Refit the electronic module to the holder as shown in chpt. 8.3.

10.5. Replacing the cover seal on the connection box

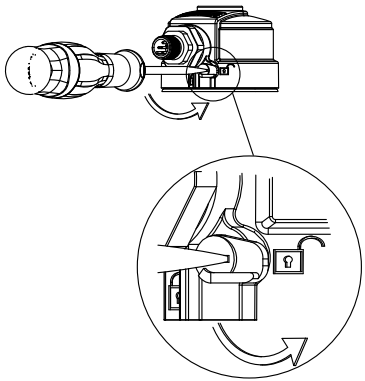	→ Using a screwdriver with a suitable head, turn the latch to the unlock position to unlock the connection box.
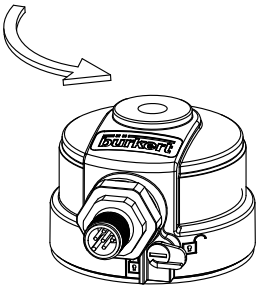	→ Unscrew the cover by hand.

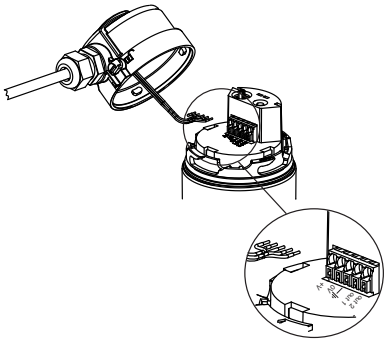	→ On a device variant with cable gland, locate the colours of the wires connected to the terminal strip. → Disconnect the wires from the terminal strip by pressing the plugs on the terminal strip with a screwdriver.
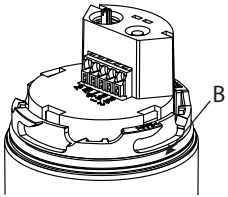	→ Remove the worn seal "B" from the cover. → Put the new seal "B" in place in the cover.
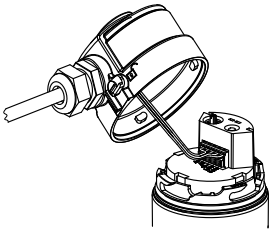	→ Reconnect the wires to the terminal strip (for a device variant with M12 male connector, see table chpt. 8.4.4 for the references).

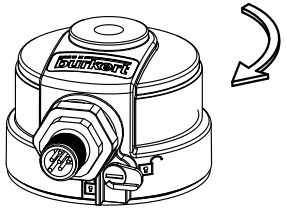	→ Put the cover in place. → Fully tighten the cover by hand to guarantee tightness.
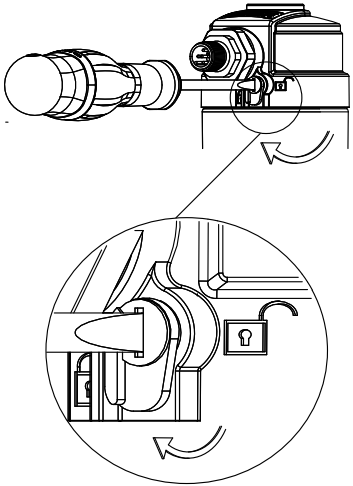	→ Using a screwdriver with a suitable head, turn the latch to the lock position to lock the cover.

Fig. 23: Replacing the cover seal on the connection box

10.6. In case of problems, excluding calibration

Red LED status (excluding calibration)	4...20 mA output status	Meaning	Resolution
flashing (once a second)	4...20 mA	Fluid temperature outside the operating range (–20...130 °C).	→ Check the fluid temperature. → Return the fluid temperature to within the operating range (–20...130 °C).
ON	22 mA	pH or redox probe disconnected	→ Reconnect the probe.
		pH or redox probe broken	→ Replace the probe (see chpt. 10.3).
		Redox probe mounted on the device whereas pH measurement mode is selected	→ Either replace the redox probe with a pH probe (see chpt. 10.3). → or change the measurement mode (see chpt. 9.3).
		Connection with temperature probe interrupted	→ Check the condition of the electrical contacts on the temperature probe (see chpt. 8.3): if the electrical contacts are oxidised, clean them with a brush. → Switch the device off. → Swith the device on. → If the fault persists, contact your Bürkert retailer.
		Device parameters cannot be read.	→ Switch the device off. → Swith the device on. → If the fault persists, contact your Bürkert retailer.

11. SPARE PARTS AND ACCESSORIES

CAUTION

Risk of injury and damage caused by the use of unsuitable parts.

Incorrect accessories and unsuitable replacement parts may cause injuries and damage the device and the surrounding area.

- Use only original accessories and original replacement parts from Bürkert.

Spare part	Article number
Seal in EPDM, Ø 46 mm, for the probe holder	559169
Seal in EPDM for cover / box tightness	561752

Accessories	Article number
pH probe, 0...14 pH, 0...+80 °C, 0...6 bar, FLATRODE pH 120 mm	561025
pH probe, 0...14 pH, −10...+60 °C, 0...6 bar, LOGOTRODE pH 120 mm	427114
pH probe, 0...14 pH, 0...+130 °C, 0...6 bar, UNITRODE PLUS pH 120 mm	560376
pH probe, 0...14 pH, 0...+130 °C, 0...16 bar, CERATRODE pH 120 mm	418319
pH probe, 0...14 pH, −10...+40 °C, 0...6 bar, PLASTRODE pH 120 mm	560377

Accessories	Article number
Redox probe, −2000...+2000 mV, 0...+80 °C, 0...6 bar, FLATRODE Redox 120 mm	561027
Redox probe, −2000...+2000 mV, −10...+50 °C, 0...6 bar, LOGOTRODE Redox 120 mm	560379
Redox probe, −2000...+2000 mV, 0...+130 °C, 0...6 bar, UNITRODE Redox 120 mm	560378
Storage solution for pH or redox probe (KCl 3M), 500 ml	418557
Buffer solution, 500 ml, pH = 4.01	418540
Buffer solution, 500 ml, pH = 7	418541
Buffer solution, 500 ml, pH = 10.01	418543
Redox solution 475 mV, 500 ml	418555
Cleaning solution kit for pH/redox probes, 3x500 ml	560949
M12, 5-pin female connector, to be wired	917116
M12, 5-pin female connector, moulded on shielded cable (2 m)	438680

12. PACKAGING, TRANSPORT

NOTICE

Damage due to transport

Transport may damage an insufficiently protected device.

- Transport the device in shock-resistant packaging and away from humidity and dirt.
- Do not expose the device to temperatures that may exceed the admissible storage temperature range.
- Protect the electrical interfaces using protective plugs.

13. STORAGE

NOTICE

Poor storage can damage the device.

- Store the device in a dry place away from dust.
- Storage temperature: –10...+60 °C (without probe).

14. DISPOSAL OF THE DEVICE

→ Dispose of the device and its packaging in an environmentally-friendly way.

NOTICE

Damage to the environment caused by parts contaminated by fluids.

- Keep to the existing provisions on the subject of waste disposal and environmental protection.

bürkert
FLUID CONTROL SYSTEMS

www.burkert.com

MAN 1000333418 EN Version: DStatus: RL (released | freigegeben) printed: 08.04.2025